# AW5520QF Outline Dimension

Unit: mm (inch)
Dimension: Nominal
Scale: Not to scale

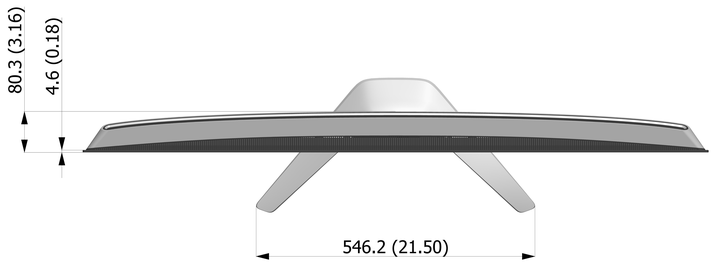


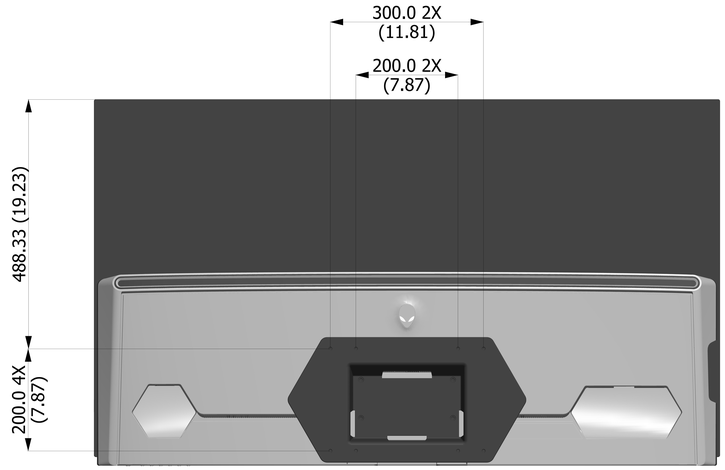

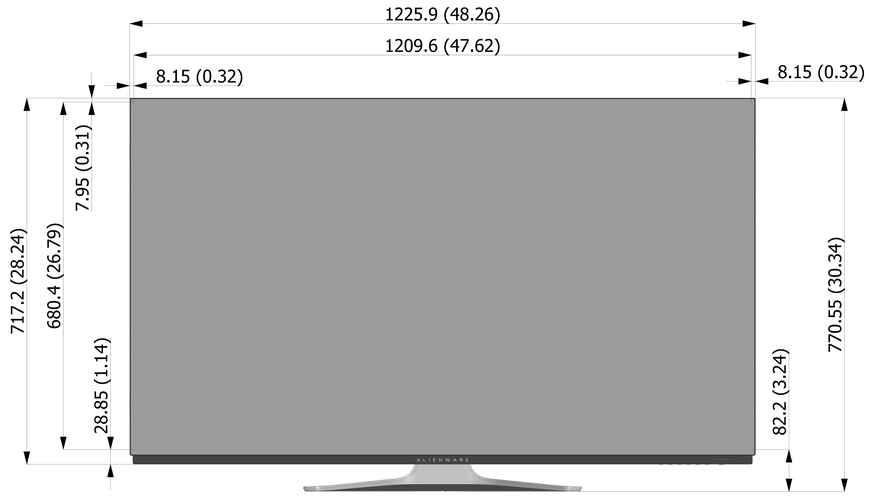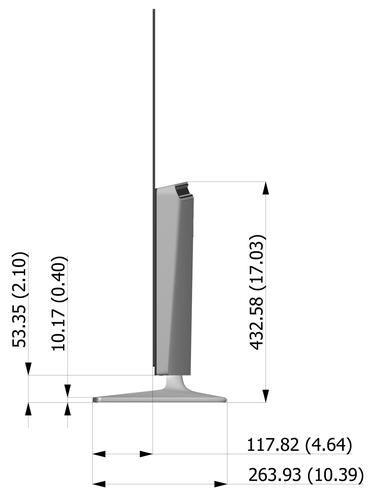
Back View of Monitor with VESA Adapter