G2422HS Outline Dimension
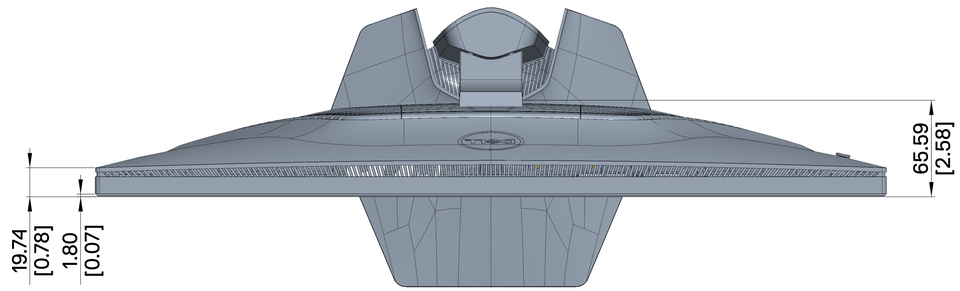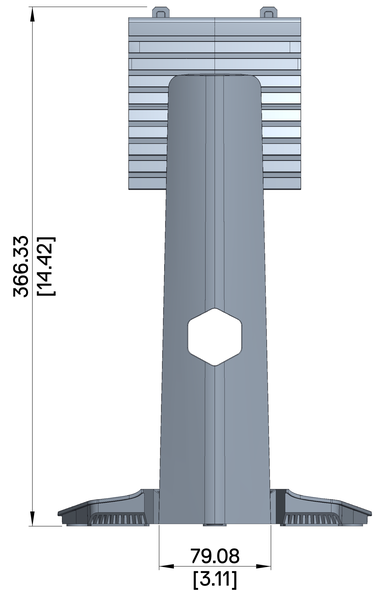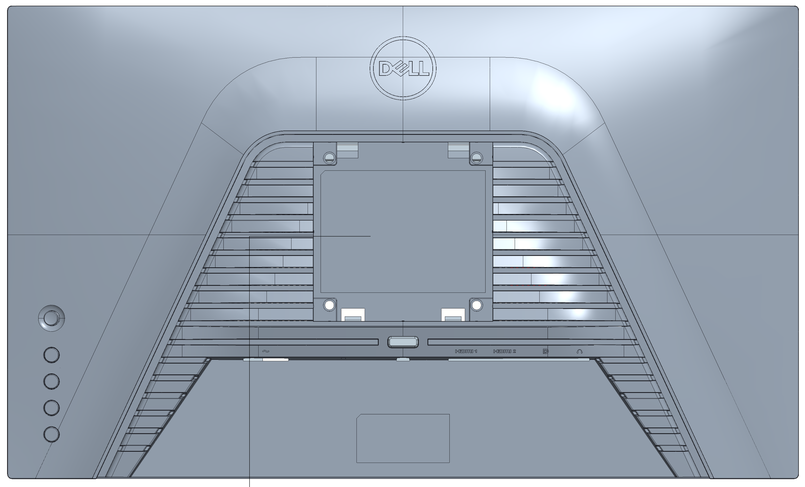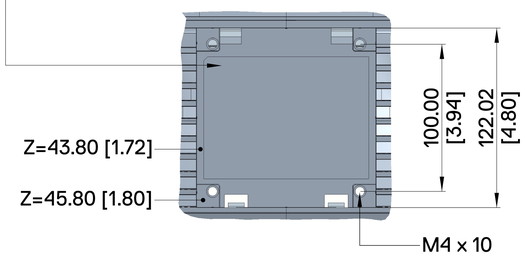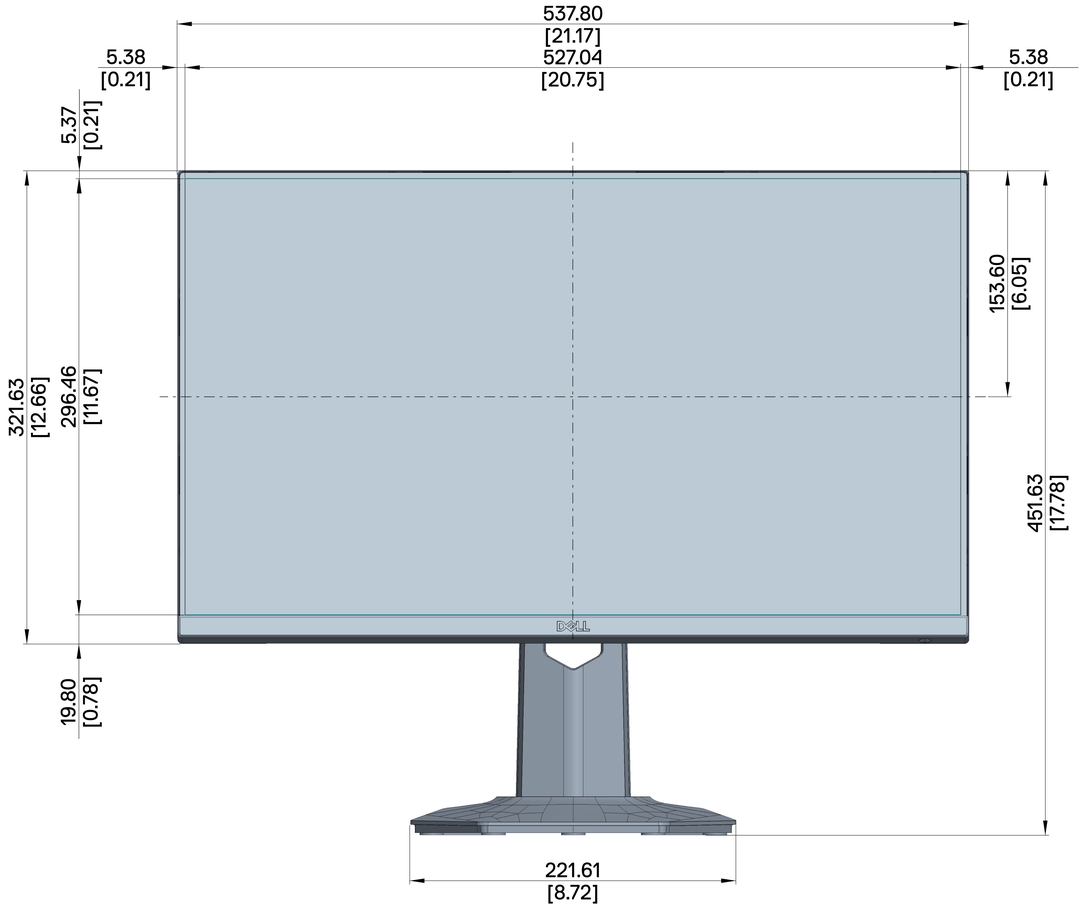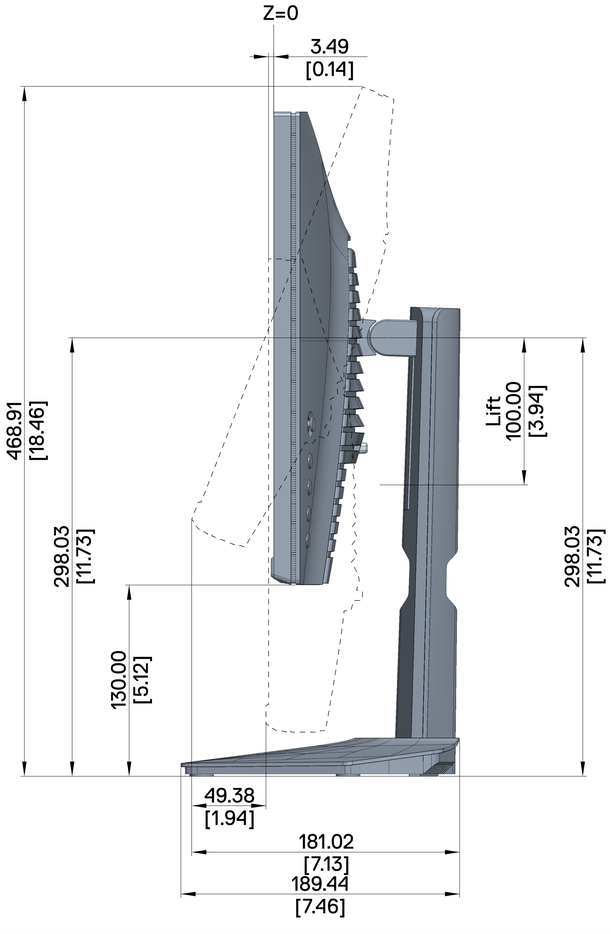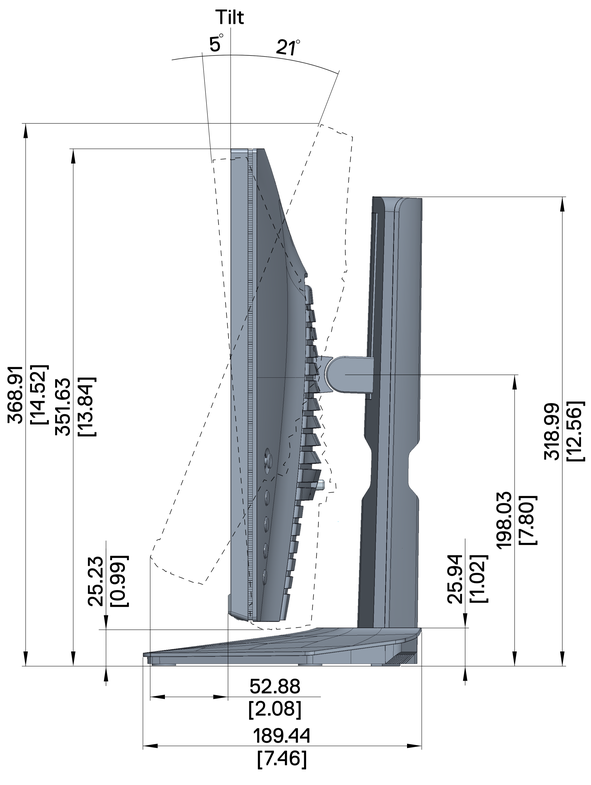
Unit : mm (inch)
Dimension : Nominal
Drawing : Not to scale